International Journal of Innovative Research in Science and Engineering
Vol. No.3, Issue 04, April 2017
www.ijirse.com
ISSN (O) 2454-9665
ISSN (P) 2454-0663

GEAR NOISE REDUCTION BY NEW APPROACHES IN GEAR FINISHING PROCESSES

Nikam Akshay[1], Patil Shubham[2], Pathak Mayur[3], Pattewar Vitthal[4], Rawanpalle Mangesh[5]

[1,2,3,4,5] *Department of Mechanical Engineering, GSMCOE Balewadi, Pune (India)*

ABSTRACT

The importance of noisy gear operation in today's new transmission is to reduced the transmission gear noise which changes as per change in manufacturing process are well known for few years in gear manufacturing process, but it is requisite to finish gears to a more degree of tolerances on pitch, angle of helix and form of profile and find their path to examine bed or now a day's assembly lines are acted carefully analysis to rectify the problems.

The main sources of noise in gear where control is utilized in production as well as in design are.

- Engagement of gears shock and control in design
- Vibration control axially in case of transmitting large torque
- Some advance machining processes come in existence are

1. Hard finishing process
2. Fine finishing process in gear
3. New shaving processes which are extension of gear shaving process.

The importance is given to selecting the number of teeth in between gear and pinion and gear which not common factor in design point of view. It is proved that enhancement in production process a certain possibility of noise reduction take place.

I. INTRODUCTION

Gear box have particular function of transmitting speed and torque. The gearbox having different components like bearings and housing, shaft, gears. The gears have teeth used for transmission of motion by proper Engagement. In the process of transmission, gearbox is source of shock and vibration which create slight discomfort to driver. There are various reasons of gear noise like improper maintenance, problem in gear manufacturing sometimes due to improper gear engagement. Due to increase in requirements regarding the behaviour of automotive transmissions, it is required to find reliable methods for noise reduction and design optimization. Continuous research on it made easy to find the way out. This method enables engineers to optimize micro geometry with robust manufacturing.

The processes like hard finishing process, Fine finishing process in gear, gear shaving come in existence to reduce noise level in gear and performing smooth operation. Mainly these are finishing processes which removes small amount of material from surfaces of the gear tooth. The purpose of finishing operation is to

rectify errors in index, helical angle, profile of tooth and eccentricity. Implementing these techniques improves surface finish of gear teeth's and hence make smoother and proper engagement which reduces gear noise and also increases factor of safety, load carrying capacity and service life.

II. GEAR FINE FINISHING

It has been proven that gear shaving is ail economical finishing method of gears in green stage and it is a fact that this process has taken a dominant position in automotive industry. Accurate gear are produced in soft stage therefore where tooth flanks reach the desired geometrical tolerance and surface finish. By controlling the tooth form ever, lead span salve at teeth and double flank composite error, the gear is even subject to noise check with master gear of superior quality. The machine which can do this specific task with master gear in soft stage and which can check the gear for noise with its mating gear after case hardening. The location of such defective spots are shown by a novel system developed on the principle of a study made at Technical University of Aachen in Germany.

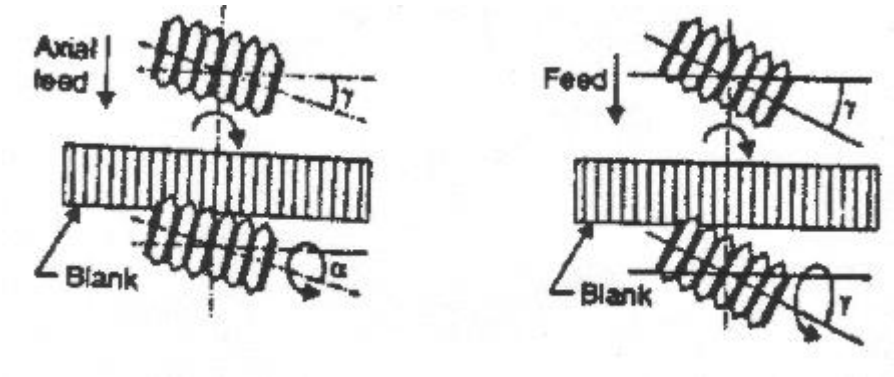

Fig.1 Hobbing gear teeth

2.1 Gear Hobbing

Hobbing is the process of generating gear teeth by means of a rotating cutter called a "hob", A had resembles a worm,- with gashes made parallel to its axis to provide cutting edges. Relief is provided behind each of the helically arranged cutting faces for clearance. Gear hobbing is a continuous cutting operation. The hob and the gear blank are connected by means of proper change gears. The ratio at hob and blank speeds is such that during one revolution of the hob, the blank tour through as many teeth as there are starts (thread) on the hob. To start cutting a thread the hob is made to clear the blank.

i. Radial Hobbing:

In radial hobbing, the feed of the hob is radial towards the center of blank radial in feed stops. When the full depth at cut is reached a small portion at hob length is doing cutting at any time. So the hob wears non uniformly. This can affect the tooth profile accuracy of the cut gear.

ii. Tangential Hobbing :

In this hobbing, the hob is set at the start at cutting to the full tooth depth and is then fed into the gear blanks by an axial feed motion. This method is generally used for generating worm wheels

International Journal of Innovative Research in Science and Engineering
Vol. No.3, Issue 04, April 2017
www.ijirse.com
ISSN (O) 2454-9665
ISSN (P) 2454-0663

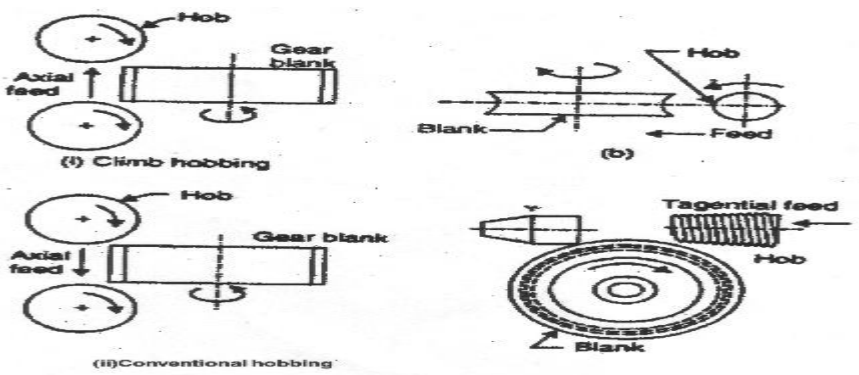

Fig.2 Types of hobbing

2.2 Gear Shaping

In gear shapers, the cutter reciprocates rapidly. The teeth are cut by the reciprocating motion at the cutter and because at this, these machines are called "gear shapers". The cutter can either be a rack type cutter or a rotary pinion type cutter. The main drawback of rack type cutter is that once the length of rack is covered by the gear blank, the cutting process is interrupted to index the blank back to starting point. In the case at 'rotating' pinion step cutter, such an indexing is not required; therefore, this type is more productive and common. The cutter is pinion shaped with a clearance on the tooth face.

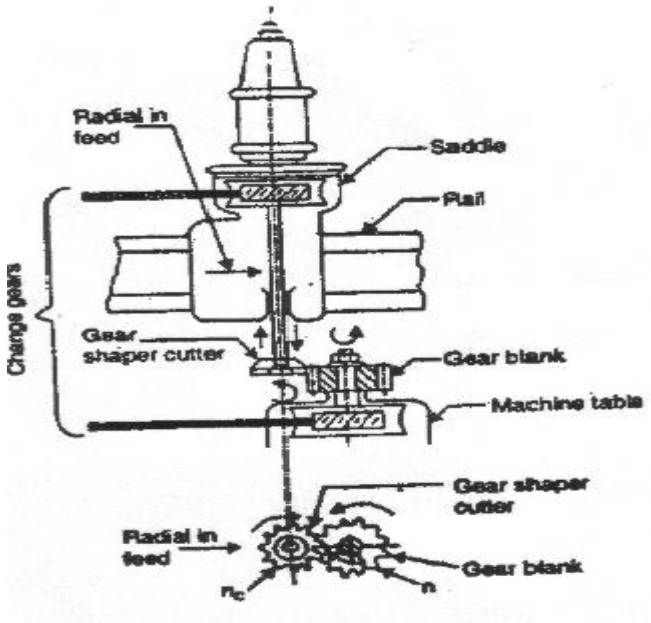

Fig.3 Gear shaper principle

2.3 Deburring

The quality at tooth-profile deburring are related items that must be controlled. Inadequate deburring can result in tooth surface damage. Excessive deburrmig resulting in heavy tooth edge round over can cause significant loss of gear face and increased surface stresses. The possible Narration at this problem are shown in fig.

ISSN (O) 2454-9665
ISSN (P) 2454-0663

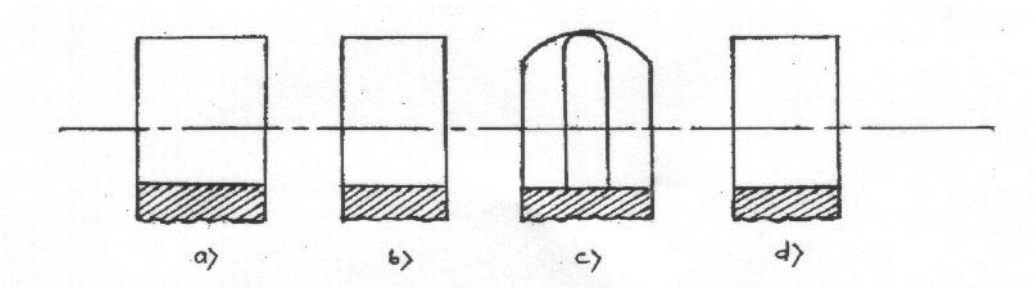

Fig.4 Qualitative comparisons at tooth Deburring

a) Typical burred tooth on trailing edge.

b) Ideally debuffed tooth.

c) Excessively deburred tooth with heavy round over

d) Acceptable deburring.

Obviously wide gears as compared with narrow gears, can afford more loss of width. Also, soft materials will be more difficult to deburr and subject to edge breakage and round over

2.4 Tooth Chamfering

Chamfering is the operation at beveling (starting) extreme end of a work piece. This is done to remove burrs, to protect the end of work piece from being damage and to have a better rule.

2.5 Gear Shaving

Gear shaving is a finishing operation that removes small amounts of metal from the flanks of gear teeth. Gear Shaving may correct small errors in tooth spacing helix angle, tooth profile and concentricity. Shaving improves the finish on tooth surfaces and can eliminate tooth end load concentration, reduce gear noise and increase load carrying capacity. Shaving has been sucessful using finishing gears of diametric pitches from 180 to 200 mm.

2.6 Hardening

Hardening is carried to produce martensitic structure to harden the steel. In this head treatment, the steel is heated to a temperature where it is completely (or nearly) austenitic in structure. The steel is allowed to remain fool some time. This is known as soaking time. This equalizes the temperature throughout the volume at the article being heated. This time depends upon the size at the article and is usually 30 miin per 30mm thickness of article. Then the article is to be cooled suddenly, called as quenching & gives the required hardness in the material.

2.7 Gear Fine Finishing

For the gears to operate efficiently and have more life the tooth profile must be very accurate and the teeth should be hard with smooth surface. Gear made by cold rolling method does not need further finishing, but gear made by other methods need further finishing operation. The fine finishing operation can be shaving and burnishing for untreated gears and grinding, lapping and honing for heat treated gears and the processes are

i. Gear Burnishiniz:

This is not a common method of gear fishing. This is a cold working process. In this method the gear is rolled under pressure with three hardened accurately formed, burnishing gears.

ii. Gear Grinding:

Grinding is the most accurate method at gear finishing. The operation can be either by form grinding our generation grinding. In this grinding the wheel is dressed to the form an involutes and is similar to the formed cutter used on a milling machine. In the generating type, the gear is rolled post the revolving wheel and the finishing is done by the flat face at the wheel.

iii. Gear Lapping:

The lapping process only corrects minute heat treatment distortion errors in hardened gears. The gear to be finished is run in mesh with a gear shaped lapping tool.

III. FINE FINISHING MACHINE

The machine developed by M/s Carl Hurth in Germany. Who have specialized in manufacturing of gear finishing machine. The machine uses a gear like cutter which is made up at a non-metallic wheel with impregnated abrasive particles on the tooth flanks. This cutter runs in mesh with the hardened gear in a cross axis relationship. In gear Shaving, the fine finishing cutter runs with the work gear with a preset backlash, sincethe work is driven and cutter is broken. The material removal follows in a plunge cut cycle.

The characteristics of fine:

- This process is suitable for shaved and heat treated gears.
- The process removes all high spots and defects on tooth flank.
- High spots of size up to 200 micron can be removed.
- Contact between the cutter and gear is single flanks. The work piece is driven while the cutter is broken.
- The cutter speed can be as high as 2000 rpm. with the cutting speed of up to 20 meters/sec. The work gear speed can go up to 5000 rpm.
- An average dressing cycle of once per 150-200 parts is common

IV. CONCLUSION

1. It is clear that care in manufacturing process or by improving the production process, a corresponding degree of noise reduction can be expected.
2. The fine finishing process helps to reduce the number of gears / gear boxes to be sent back to assembly for relook into the cause of defects and eliminations, to signify in terms of value, less than 0.5 percent.
3. The overall noise reduction with the fine finishing processes can be upto 3 to 4 dBa.

REFERENCE

1 .J. Tuma, Dedopplerisation in Vehicle External Noise Measurements, Proceedings of Eleventh international congresson sound and vibration (ICSV11), St.Petersburg, 151–158,(2004).

2 J. Tuma, Processing of Signals from Vehicle Pass-by NoiseTests, Proceedings of Colloquium Diagnosticof machine and structures ’96, U´ T AV Cˇ R Praha,(1996), 1st ed.

3 R. Kubena, Diagnostics in machinery using noise and vibration signals (Doctor thesis in Czech), VSB—Technical University of Ostrava, (2002).

4 H. Vold and J. Leuridan, High Resolution Order Tracking at Extreme Slew Rates, Using Kalman Tracking Filter, SAE Paper 931288, (1993).