International Journal of Innovative Research in Science and Engineering
Vol. No.3, Issue 04, April 2017
www.ijirse.com
ISSN (O) 2454-9665
ISSN (P) 2454-0663

AUTOMATIC BAR FEEDING MECHANISM FOR PIPE CUTTING MACHINE

Mr. Pranit Sampat Wakhare[1], Mrs. Shital Kalicharan Sharma[2], Mr. Ashish Vilas Waghmare[3], Mrs. Pallavi Suryakant Rajmane[4]

[1,2,3,4]Department of Mechanical Engineering,
G. S. Moze College of Engineering, Balewadi, Pune (India)

ABSTRACT

To reduce human effort for repetitive work of cutter pieces of pipes as well as providing a convenient fixture to support and hold the pipes/rods during cutting. The subject is undertaken as a part of B.E mechanical project. It can be termed as smart machine.

There are many industrial applications where round bar or square bars are required to be operated on different machines to make machine components such as Shafts, Bolts, Screws, etc. This needs more and more number of pieces to be cut for mass production of those components. The bar feeding mechanism is a metal cutting machine tool designed to feed the metal. The machine is exclusively intended for the mass production and they represent faster and more efficient way to feed the metal.

The clamping arrangement can be varied according to need of operations suitable. The overall system is compact in size, light weight, modular and flexible to be used in small works jobs who need batch production. The setup overall configuration can be adopted by a semi-skilled worker easily and can vary the operations by making certain small changes. The system even has the potential to add up a PLC system to control its overall working with ease and with less effort provided. This system has the potential to adopt higher level of automation if desired in future.

I. INTRODUCTION

This is an era of automation whereit is broadly defined as replacement of manualeffort by mechanical power in all degrees ofautomation. The operation remains anessential part of the system although withchanging demands on physical input as thedegree of mechanization is increased.

Degreesof automation are of two types, viz.

- Full automation.
- Semi automation.

In semi automation a combination of manual effort and mechanical power is required whereas in full automation human participation is very negligible.Mechanical engineering without production and manufacturing is meaningless and inseparable. Production and manufacturing process deals with conversion of raw materials inputs to finished products as per required dimensions specifications and efficiently using recent technology.

The primary concern of this system is to carry out three operations Feeding, Clamping and cutting. The sequenced operations of the system must be precisely timed. The major work of this system is to slice out large number of jobs in rod or pipe form according to the batch production. The selection of cutter is based on the stress calculated considering the pipe or rod material. The material preferred in this system is a PVC (polyvinyl chloride) pipe for demonstration. But mild steel rods and pipes also be worked out by using different cutters specifications. The cutter to be used in the machine system has been considered by calculating the torque required for cutting PVC object by help of the design data available. With the help of this system the time required to slice the objects like the pipe or rod will be less the accuracy of slicing or cutting of the material will also be improved. The system can be handled by semi-skilled operators with ease. The layout of the machine is compact to be placed in a small workshops.

Automation or automatic control is theuse of various control systems for operatingequipment such as machinery, processes infactories, boilers and heat treating ovens,switching in telephone networks, steering andstabilization of ships, aircraft and other applications with minimal or reduced humanintervention. Some processes have beencompletelyautomated.The biggest benefit of automation isthat it saves labour, however, it is also used tosave energy and materials and to improvequality, accuracy and precision. The termautomation, inspired by the earlier wordautomatic (coming from automaton), was notwidely used before 1947, when GeneralMotors established the automation department.It was during this time that industry wasrapidly adopting feedback controllers, whichwere introduced in the 1930s. Automation hasbeen achieved by various means includingmechanical, hydraulic, pneumatic, electrical,and electronic and computers, usually incombination. Complicated systems, such asmodern factories, airplanes and ships typicallyuse all these combined techniques.

2.1 Types of automation

One of the simplest types of control ison-off control. An example is the thermostatsused on household appliances. Electromechanical thermostats used in HVACmay only have had provision for on/off controlof heating or cooling systems. Electroniccontrollers may add multiple stages of heatingand variable fan speed control. Sequencecontrol, in which a programmed sequence ofdiscrete operations is performed, often basedon system logic that involves system states.An elevator control system is an example of sequence control. The advanced type ofautomation that revolutionized manufacturing,aircraft, communications and other industries,is feedback control, which is usuallycontinuous and involves taking measurementsusing a sensor and making calculatedadjustments to keep the measured variablewithin a set range.

Now a days almost all the manufacturing are being automated in order to deliver the products at faster rate. The manufacturing operation is being automated for the following reasons:

1. To achieve mass production.
2. Increased throughput or productivity.
3. Improved quality or increased predictability of quality.
4. Improved robustness (consistency), of processes or product.
5. Increased consistency of output.
6. Reduced direct human labor costs and expenses.
7. To reduce work load.

8. To reduce material handling.

9. To reduce worker fatigue.

10. Less maintenance.

III. LITURATURE REVIEW

The vast review of literature will help to understand the concepts, theorems and different factors affecting the performance of machine. R.S.Khurmi, J.K.Gupta in their book "Theory of machines" (Velocities in mechanisms) helps to find Velocity diagrams of slider crank mechanism.

Automatic stock bar feed mechanism for automatic screw machines

US 2300457 A by MARIOTTE

This invention relates to stock bar feed mechanism for automatic machine tools or automatic screw machines, which mechanism embodies a plunger movable in a tube or cylinder to which a motive fluid, as air, is supplied to actuate the plunger to feed the stock bar against the stop of the machine tool or screw machine.

It has for its object a means for cutting oil the supply of motive fluid, or air, to the cylinder when the plunger has traveled a predetermined distance, this distance being that traversed by the plunger when a new stock bar is being inserted in the tube.

It further has for its object an interlocking means between the operating connections for the valve which controls the flow of air to the tube or cylinder, and a locking device which prevents displacement of the tube out of normal position, the locking device preventing opening of the valve, except when the tube is in its normal or operative position or permitting displacement of the tube out of normal position only when the valve is closed. The tube is shiftable out of its normal or operative position to permit the insertion of a new stock bar in the tube.

The invention is shown as applied to the machine of my pending application, Serial Number 353,545, filed August 21, 1940.

The invention consists in the novel features and in the combinations and constructions hereinafter set forth and claimed.

In describing this invention, reference is had to the accompanying drawings in which like characters designate corresponding parts in all the views.

During the repeated operations of the automatic metal working machine, the stock bar is fed in the tube step by step by the air pressure behind the plunger 8. When the stock bar is nearly used up, the plunger uncovers the port 38 permitting the air to enter the cylinder 35 and actuate the valve operating connections to close the valve in the conduit I5. This closing of the valve operates the interlock between the latch or look 24 and the hub of the handle 28, so that the latch or lock 24 can be moved to unlocked or dash line position (Figure 2) and the tube 1 can then also be swung out of alignment with the passage 4 into the dash line position (Figure 2). A new bar is then inserted in the tube. The tube is then swung back into alignment with the passage 4 and the lock or latch 24 then moved into locked position, this operation permitting th handle 28 to be operated to again open the valve in the conduit l5.

Claims of the inventor:

1. In an automatic stock bar feed for automatic metal working machines, the combination with a feed tube closed at one 'end forming a cylinder, a push plunger movable in the tube, means for supplying pressure to the

closed end of the tube behind the plunger to actuate the plunger to feed the bar, a pressure system for supplying a pressure fluid to the closed end of the cylinder including a control valve; of automatic means controlled by the position of the plunger in the cylinder operable to close the valve when the plunger has traveled a predetermined distance, the automatic means including a pressure operated motor including a movable member, and a conduit connection between the motor and the cylinder and opening into the cylinder through a port located to be passed by the plunger I when the plunger has traveled a predetermined distance, and motion transmitting means between the movable member of the motor and the valve.

2. In an automatic stock bar feed mechanism for automatic metal working machines having a passage for the stock bar, the combination with a feed tube normally aligned with said passage and being closed at its end remote through which the stock bar is fed providing a cylinder, a plunger movable in the tube, and a system for supplying a pressure fluid to the closed end of the tube "erating connections for the valve, said tube before actuating the plunger including a valve.

3.1 Theoretical Analysis of Multi-Way Power Hacksaw Machine

Prof. KshirsagarPrashant R. , RathodNayan J , RahatePrashant P , HalayePrashant P , SurveSachin S.

To achieve this goal the Multi-way power hacksaw machine is developed. This paper proposes the model of multi-way hacksaw machine which is able to cut four pieces simultaneously without any jerk and minimum vibrations. The model implies conversion of rotary motion into the reciprocating motion for proper working of hacksaw. This model overcomes the limitations of conventional hacksaw machines which can cut single piece at a time. It is able to cut metal bars of different materials at same time and will be helpful in many industries due its compatibility, reliability and efficiency.

In present condition many electrically operated power hacksaw machines of different companies with different specifications are available for the use in shop floor. These machines are so precise that they can cut metal bars with minimum time made up of different materials but they have one and major disadvantage that those are able to cut single piece of bar at a time. For industries to achieve the mass production, it is necessary to cut metal bars with high rate. So it is impossible to depend upon conventional single frame power hacksaw machines and need the improvement in technology and design of such machines. With the help of this multi-way power hacksaw machine the four metal bars can be cut simultaneously to get high speed cutting rate and to achieve mass production for maximum profit in related companies. As this machine overcomes all the limitations and drawbacks of conventional hacksaw machines, it is also helpful for small scale industries due to its simple working and operating conditions along with its compatibility, efficiency and affordable price.

IV. PROPOSED MODEL

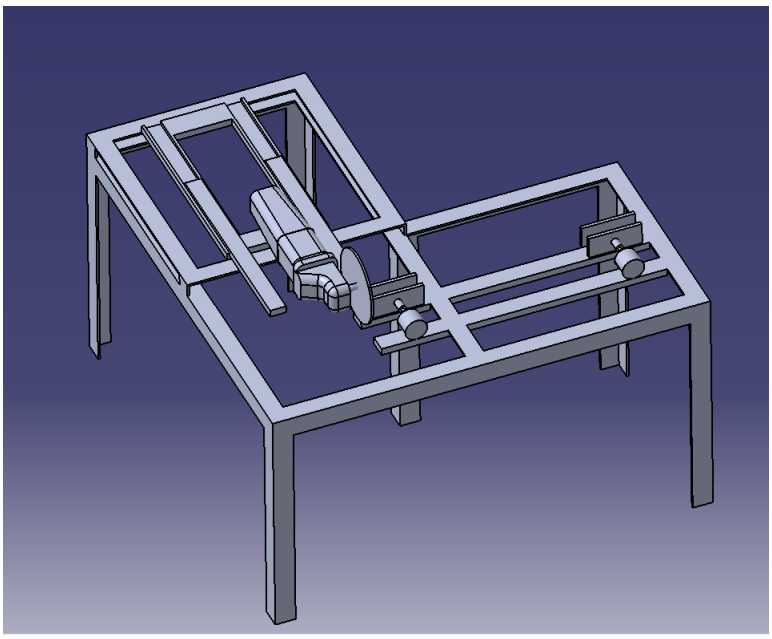

Fig4. proposed model using CATIAV5

V. CONCLUSION

Thus, this work provides an alternative to the existing automatic PVC pipe cutting machine, in terms of automating the pipe entry into the cutting apparatus, eliminates power fluctuation and lesser initial investment. Time consumption is less when compared to manual cutting. This work provides the desired output.

REFERENCES

[1.] "Automatic stock bar feed mechanism for automatic screw machine", Petent No. US 2300457 A by MARIOTTE, Filed Sept. 24, 1940 2 Sheets-Sheet 2 Patented Nov. 3, 1942 UNITED STATESPATENT OFFICE AUTOMATIC STOCK BAR FEED MECHANISM FOR. AUTOMATIC SCREW MACHINES.

[2.] KshirsagarPrashant R. , RathodNayan J , RahatePrashant P , HalayePrashant P , SurveSachin S, International Journal for innovative research in Science and Engineering, Volume No. 01, Issue 02, March 2016.

[3.] "DESIGN AND DEVELOPMENT OF AUTOMATED VEGETABLE CUTTING MACHINE" by Tony Thomas.A, 2. Theoretical Analysis of Multi-Way Power Hacksaw Machine by Prof. MuthuKrishnan.A, Sre. NandhaGuhan. K.S, 5th International & 26th All India Manufacturing Technology, Design and Research Conference (AIMTDR 2014) December 12th–14th, 2014, IIT Guwahati, Assam, India.

[4.] Design and Fabrication of Automated Hacksaw Machine by D.V.Sabariananda, V.Siddhartha, B.SushilKrishnana , T.Mohanraj, Second National Conference on Trends in Automotive Parts Systems and Applications (TAPSA-2014).