International Journal of Innovative Research in Science and Engineering
Vol. No.3, Issue 04, April 2017
www.ijirse.com
ISSN (O) 2454-9665
ISSN (P) 2454-0663

REVIEW PAPER ON UNDERGROUND STORAGE TANKS

Omkar Y. Vinode, Santosh B. Verma, Lalit P. Mehatkar, Laukik M. Kale, Kuldip B. Mandade

Civil Engineering, Genba Sopanrao Moze College of Engineering, Pune University

ABSTRACT

This study concerns the regulation of UST systems and the pollution of groundwater by ether oxygenates that have leaked from these systems. Historical contamination of groundwater by UST systems that leaked oxygenates-containing gasoline blends have proved very dangerous and harmful in concern areas, and concern has been expressed that this pattern of groundwater contamination could be repeated in the future.

This study tackles these concerns by undertaking an analysis of the regulatory situation in the areas regarding UST systems and groundwater protection, and comparing this to what is known about equivalent regulations. The use of fuel oxygenates and regulation of UST systems in the construction sites, a consequence of differences in environmental regulation and the choices made in fuel specification.

These differences are briefly discussed in this chapter to provide background for the remainder of the report.

Keywords: Basic considerations, Design, Installation, Inspection & Regulation for UST

I. INTRODUCTION

An underground storage tank system (UST) is a tank and any underground piping connected to the tank that has at least 10 percent of its combined volume underground. The UST regulations apply only to UST systems storing either petroleum or certain hazardous substances**.** When the UST program began, there were approximately 2.1 million regulated UST systems in the United States. Today there are far fewer since many substandard UST systems have been closed. For the most current statistics, see UST performance measures. Nearly all USTs regulated by the underground storage tank requirements contain petroleum. UST owners include marketers who sell gasoline to the public (such as service stations and convenience stores) and non-marketers who use tanks solely for their own needs (such as fleet service operators and local governments). EPA estimates that less than 10,000 tanks hold hazardous substances covered by the UST regulations.

II. LITERATURE REVIEW

This Indian Standard the draft finalized by (First Revision) was adopted by the Bureau of Indian Standards, after the Structural Engineering Sectional Committee had been approved by the Civil Engineering Division Council.

This code has been prepared to provide the petroleum industry with tanks of adequate safety and reasonable economy which can be built in any size required to meet the needs of the industry subject to the limitations given in this code and to establish uniformity in designing, fabricating, testing and installing the horizontal storage tanks.

ISSN (O) 2454-9665
ISSN (P) 2454-0663

This code is not intended to establish a fixed series of allowable tank sizes but to assist the purchaser in the selection of the size of the tank that may be required to meet his particular need. This code was first published in 1984. In the first revision, based on the experience gained in the use of this code, following major modifications have been effected:

a) Minimum shell plate thickness both for underground and above-ground tanks has been modified as 5.00 mm for tanks up to 20 kilolitres capacity.

b) A clause relating to earthen connection to safeguard the tanks from the accumulation of static charge has been included.

David Durenberger proposed amendments in February, 1984 in his bill, S. 2513. 106 This bill required inventory, registration and inspection of underground storage tanks and federal design standards for new tanks, as well as providing funds for remediation.

II. BASIC INFORMATION

EPA works to improve human health and the environment in Indian country by working with tribes to:

1) Prevent releases from USTs
2) Ensure releases are cleaned up
3) Collaborate and strengthen the relationship between EPA and tribes

The UST program in Indian country includes marketers and nonretail facilities that have USTs. Marketers include retail facilities such as gas stations and convenience stores that sell petroleum products. Non-retail facilities include those that do not sell petroleum products, but may rely on their own supply of gasoline or diesel for taxis, buses, limousines, trucks, vans, boats, heavy equipment, or a wide range of other vehicles. Of the more than 560 federally recognized tribes about 200 have federally-regulated underground storage tanks on their lands. Of those 200 tribes, over half have 10 or fewer active underground storage tanks. About 20 tribes have 30 or more underground storage tanks.

III. GENERAL

The tank may be manufactured from suitable size plates covered in IS 1730 : 1989.

Table I covers recommended sizes, plate thickness for tanks of various nominal capacities up to 90 kl. The shell and end plate thicknesses include a corrosion allowance of l-5 mm.

General arrangements for above-ground and underground tanks are shown in Fig. 1 and 2, respectively.

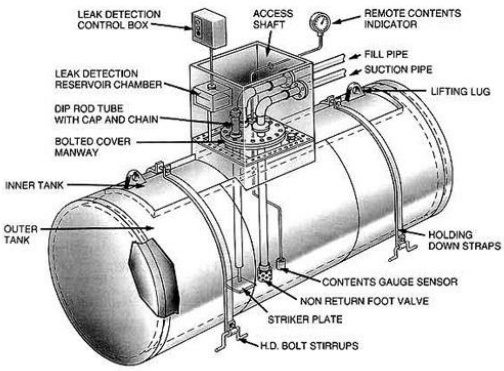

FIG-1. Typicaical Arrangement of Under-Groundh Orizontalt ANK

ISSN (O) 2454-9665
ISSN (P) 2454-0663

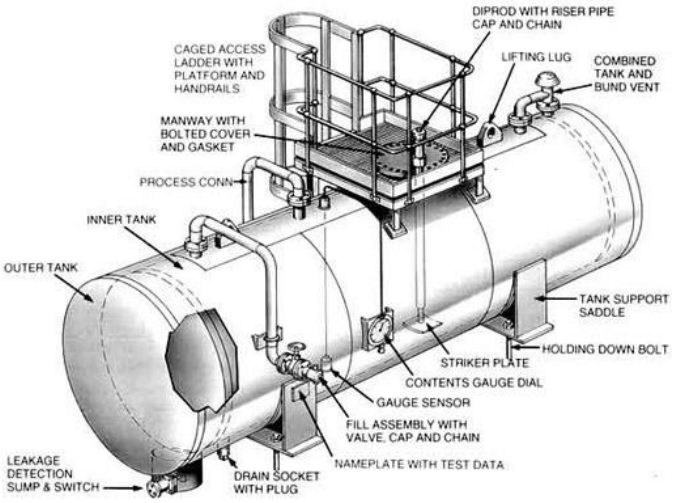

Fig-2 Typical Arrangement of Above-Ground Horizontal Tank

IV. EPA REGULATIONS FOR TANKS

These USTs not need to meet federal requirements for USTs:

1) Farm and residential tanks of 1,100 gallons or less capacity holding motor fuel used for noncommercial purposes;
2) Tanks storing heating oil used on the premises where it is stored;
3) Tanks on or above the floor of underground areas, such as basements or tunnels;
4) Septic tanks and systems for collecting storm water and wastewater;
5) Flow-through process tanks;
6) Tanks of 110 gallons or less capacity and
7) Emergency spill and overfill tanks.

V. WHAT ARE THE STANDARD REQUIREMENTS FOR USTS?

In 1988, EPA issued UST regulations divided into three sections: technical requirements, financial responsibility requirements, and state program approval objectives (as described below).

- **Technical requirements for USTs**

EPA's technical regulations for USTs are designed to reduce the chance of releases from USTs, detect leaks and spills when they do occur, and secure a prompt clean-up. UST owners and operators are responsible for reporting and cleaning up any releases.

- **Financial responsibility regulations for USTs**

EPA designed the financial regulation responsibility to ensure that, in the event of a leak or spill, an owner or operator will have the resources to pay for costs associated with cleaning up releases and compensating third parties.

VI. DESIGN

Tanks manufactured to provisions of this code, shall be designed for a pressure of 0.05 MPa when full of water. Thicknesses chosen shall not be less than the thicknesses given in Table 1.

ISSN (O) 2454-9665
ISSN (P) 2454-0663

Tanks to be installed underground shall also be designed for external earth pressure acting on the tank when it is empty.

6.1 Corrosion Allowance

Minimum corrosion allowance of l-5 mm shall be considered in design of tanks. To safeguard against corrosion caused by the environment and the product stored should be followed.

6.2. Design Temperature

The design temperature shall be the lowest one day mean temperature where the tank is to be installed, as available from relevant IS codes, metrological department or local authorities.

6.3. Foundation

6.3.1. Tanks shall be built on good foundations.

Above-ground tanks shall be provided with steel wear plates for installing them on concrete pedestals or steel cradles as specified by the purchaser.

6.3.2. Typical arrangement for above-ground tank is given in Fig. 2. Concrete pedestals shall be designed to support the tank full with water.

6.3.3. As tank diameter or shell thickness ratio increases, the shell shall be analysed for buckling resistance to reaction loads at the concrete pedestals _and associated local loads as per

IS 2825:1969.

Table1- Diamensin of cylindrical fuel oil storage tanks

According **National Board Standards**

Capacity (gallons)	Diameter (inches)	Length (feet-inches)	Shell thickness (inches)	Head thickness (inches)	Weight (lb)
550	48	6-0	3/16	3/16	800
1000	48	10-10	3/16	3/16	1300
1100	48	11-11	3/16	3/16	1400
1500	48	15-8	3/16	3/16	1650
	65	9-0	3/16	3/16	1500
2000	65	11-10	3/16	3/16	2050
2500	65	14-10	3/16	3/16	2275
3000	65	17-8	3/16	3/16	2940
4000	65	23-8	3/16	3/16	3600

ISSN (O) 2454-9665
ISSN (P) 2454-0663

5000	72	23-8	¼	¼	5800
	84	17-8	¼	¼	5400
7500	84	26-6	¼	¼	7150
	96	19-8	¼	¼	6400
10000	96	26-6	¼	5/16	8540
	120	17-0	¼	5/16	8100
12000	96	31-6	¼	5/16	10500
	120	20-8	¼	5/16	9500
15000	108	31-6	5/16	5/16	13300
	120	25-6	5/16	5/16	12150
20000	120	34-6	5/16	5/16	15500
25000	120	42-6	3/8	3/8	22300
30000	120	51-3	3/8	3/8	28000

VII. TANK AND PIPING INSTALLATION

In 2015, EPA revised the underground storage tank (UST) regulations. Below you will find the requirements for tank and piping installation.

If you install an UST system after December 22, 1988, it must be properly installed according to a code of practice developed by a nationally recognized association or independent testing laboratory and according to the manufacturer's instructions. Some states may require that UST installers be certified (in addition to being qualified) to conduct this type of work. You should check with your implementing agencies to be sure that you follow the appropriate regulations.

2015 requirement for secondary containment and under-dispenser containment – Beginning on April 11, 2016 all new and replaced tanks and piping must meet the secondary containment requirements, including interstitial monitoring. EPA considers piping replaced when 50 percent or more of the piping is removed and other piping is installed. In addition, beginning on April 11, 2016 new dispenser systems must have under-dispenser containment.

Installation includes excavation, tank system siting, burial depth, tank system assembly, backfilling around the tank system, and surface grading. Many mistakes can be made during installation. For example, mishandling of the tank during installation can cause structural failure of fiberglass-reinforced plastic tanks or damage to steel tank coatings and cathodic protection. Improper layout of piping runs, incomplete tightening of joints, inadequate cover pad construction, and construction accidents can lead to failure of piping.

1) the installer has been certified by the tank and piping manufacturers; or
2) the installer has been certified or licensed by the implementing agency; or
3) the installation has been inspected and certified by a registered professional engineer with education and experience in UST system installation; or
4) the installation has been inspected and approved by the implementing agency; or

5) all work listed in the manufacturer's installation checklists has been completed; or
6) the owner and operator have complied with another method for ensuring compliance with the installation requirements that is determined by the implementing agency to be no less protective of human health and the environment.

VIII. LEAKAGE TANKS: A NATIONAL PROBLEM

In recent years thousands of leaked UST have been recognized and thousand will be probably to be found. Underground tanks containing motor fuels and hazardous chemicals found in many places.

8.1. Corrosion

Corrosion is a natural process, which converts a refined metal to a more chemically-stable form, such as its oxide, hydroxide, or sulphide. It is the gradual destruction of materials (usually metals) by chemical and/or electrochemical reaction with their environment. Corrosion engineering is the field dedicated to controlling and stopping corrosion.

8.1.1. How it can be controlled

Cathodic protection (CP) is a technique to control the corrosion of a metal surface by making that surface the cathode of an electrochemical cell. Cathodic protection systems are most commonly used to protect steel, and pipelines and tanks; steel pier piles, ships, and offshore oil platforms

IX. WHY BE CONCERNED ABOUT USTS?

Until the mid-1980s, most USTs were made of bare steel, which is likely to corrode over time and allow UST contents to leak into the environment. Faulty installation or inadequate operating and maintenance procedures also can cause USTs to release their contents into the environment.

The greatest potential hazard from a leaking UST is that the petroleum or other hazardous substance can seep into the soil and contaminate groundwater, the source of drinking water for nearly half of all Americans. A leaking UST can present other health and environmental risks, including the potential for fire and explosion.

9.1. Preventing and Detecting Underground Storage Tank (UST) Releases

Regulations require that USTs are installed properly; protected from spills, overfills, and corrosion; equipped with release detection; and properly closed. This section helps UST owners and operators meet prevention, financial responsibility, and reporting and record keeping requirements.

9.2. How can UST releases be prevented?

The Environmental Protection Agency (EPA) designed part of the technical regulations for underground storage tank (UST) systems to prevent releases from USTs. The regulations require owners and operators to properly install UST systems and protect their USTs from spills, overfills, and corrosion and require correct filling practices to be followed. In addition, owners and operators must report the existence of new UST systems, suspected releases, UST system closures, and keep records of operation and maintenance.

9.3. What is spill protection?

Spill protection is containment around the fill pipe that catches small drips or spills that occur when the delivery hose is disconnected from the fill pipe. This containment is typically called a spill bucket. It may also be re-

ferred to as a catchment basin, or spill containment manhole. Basically, a spill bucket is a basin sealed around the fill pipe. To protect against spills, the spill bucket should be large enough to contain what may spill when the delivery hose is uncoupled from the fill pipe. A typical delivery hose can hold about 14 gallons of fuel. Spill buckets range in size from those capable of holding only a few gallons to those that are much larger--the larger the spill bucket, the more spill protection it can provide.

You need a way to remove liquid from spill buckets. Manufacturers may equip spill buckets with either a pump or drain to remove liquid. Or you can purchase a spark free hand pump. You should try to keep your spill bucket clean and empty. Some spill buckets can collect enough water and sediment, along with spilled product, to make draining this mixture into the tank unwise. If this happens, you may pump out the spill bucket and dispose of the liquid properly. If the liquid contains fuel or chemicals, it could be considered a hazardous waste.

9.4. What is overfilling protection?

Overfill protection devices either shut off product flow, restrict product flow or alert the delivery operator with an alarm when the tank is close to being full. These devices are installed inside the tank and activate if the product in the UST reaches a certain level in the tank. Typically, your UST must have overfill protection. The three types of overfill protection devices are:

1) Automatic shutoff devices
2) Overfill alarms
3) Flow restrictors (also called ball float valves)

9.5. What are correct filling practices?

Many releases at UST sites come from spills and overfills that occur during delivery. Although these spills are usually small, repeated small releases can cause big environmental problems. To help prevent spills and overfills during tank filling, the UST regulations require owners and operators to meet the following correct filling practices:

1) Volume available in the tank is greater than the volume of regulated substance to be transferred to the tank before the transfer is made
2) Transfer operation is monitored continuously

9.6. What is corrosion protection?

Unprotected underground metal components of the UST system can corrode and release product through corrosion holes. Corrosion can begin as pitting on the metal surface. As the pitting becomes deeper, holes may develop. Even a small corrosion hole can result in significant releases over time. In addition to tanks and piping, metal components can include flexible connectors, swing joints, and turbines. All metal UST system components that are in contact with the ground and routinely contain product must be protected from corrosion. The two common methods used for protecting metal components from corrosion are cathodic protection and isolating the metal component from the corrosive environment.

All USTs installed after December 22, 1988 must meet one of the following performance standards for corrosion protection:

1) Tank and piping completely made of no corrodible material, such as fiberglass-reinforced plastic
2) Tank and piping made of steel having a corrosion-resistant coating and having cathodic protection
3) Tank made of steel clad with a thick layer of no corrodible material (this option does not apply to piping)

4) Tank and piping are installed without additional corrosion protection measures provided that a corrosion expert has determined that the site is not corrosive enough to cause it to have a release due to corrosion during its operating life and owners or operators maintain records that demonstrate compliance with this requirement
5) Tank and piping construction and corrosion protection are determined by the implementing agency to be designed to prevent the release or threatened release of any stored regulated substance in a manner that is no less protective of human health and the environment than the options listed above

UST systems must also be designed, constructed, and installed in accordance with industry codes and standards and according to manufacturer's instructions.

1) Interior lining
2) Cathodic protection
3) Internal lining combined with cathodic protection

1) The tank is internally inspected and assessed to ensure that the tank is structurally sound and free of corrosion or holes.
2) The tank has been installed for less than 10 years and uses monthly monitoring for releases.
3) The tank has been installed for less than 10 years and is assessed for corrosion holes by conducting two tightness tests--the first occurs prior to adding cathodic protection and the second occurs 3 to 6 months following the first operation of cathodic protection.
4) The tank is assessed for corrosion holes by a method that is determined by the implementing agency to prevent releases in a manner that is no less protective of human health and the environment than those listed immediately above.

All cathodic protection systems: Owners and operators must have a periodic test conducted by a qualified cathodic protection tester to make sure the cathodic protection system is adequately protecting the UST system. This test must be conducted:

1) Within six months of installation
2) At least every three years after the previous test
3) Within six months of any repair to the UST system

Owners and operators must make sure the cathodic protection tester is qualified to perform the test and follows a standard code of practice to determine that test criteria are adequate. If any test indicates your tanks are not adequately protected, you must have a corrosion expert examine and fix your system.

Keep records of the most recent two cathodic protection tests.

Impressed current cathodic protection systems

Owners and operators must inspect the rectifier at least every 60 days to make sure that it is operating within normal limits.

1) This inspection involves reading and recording the voltage and amperage readouts on the rectifier. Owners and operators can perform this periodic inspection.
2) Owners and operators need to make sure the corrosion expert provided the rectifier's acceptable operating levels so owners and operators can compare the readings to make sure they are within acceptable operating levels. If readings are not within acceptable levels, contact a corrosion expert to address the problem.

Internally lined tanks

Owners and operators of internally lined tanks must have the lined tank inspected by a trained professional to determine if the lined tank is structurally sound with the lining still performing according to original design specifications. The lining inspection must follow a standard code of practice. The inspections must occur within 10 years after lining and then at least every 5 years thereafter. Keep a record of the internal lining inspection as required by the standard code of practice used for the lining inspection. If owners and operators use both an internal lining and cathodic protection for their UST system and the steel tank was assessed and determined to be structurally sound and free of corrosion holes before adding the cathodic protection, then periodic inspections of the lining are not required.

9.7. When conducting the walkthrough inspection, check the following:

1) Spill prevention equipment
- Check for damage
- Remove any liquid or debris
- Check for and remove any obstructions in the fill pipe
- Check the fill cap to make sure it is securely on the fill pipe
- Double walled spill prevention equipment with interstitial monitoring check for a leak in the interstitial area

2) Release detection equipment
- Ensure it is operating with no alarms or other unusual operating conditions present
- Ensure records of release detection testing are reviewed and current

3) Containment sumps
- Check for damage, leaks into the containment area, or releases to the environment
- Remove any liquid or debris
- Double walled containment sumps with interstitial monitoring check for a leak in the interstitial area

4) Hand held release detection equipment (for example tank gauge sticks or ground water bailers)
- Check for operability and serviceability.

X. CONCLUSION

From the above review we have conducted a lot of research and have visited few sites to understand and learn about the Underground Storage Tanks for analysis purpose.

By this review we have understood the methodology of work which has been carried out throughout the years and changes which have been made in the rules and regulation of UST.

A. Methodology of work

1) Through various site visits, survey, reference from various books and reference paper carried out to understand the basic concept of the topic.
2) Need of the project work in industries.
3) Collection of various data regarding UST.
4) Working out on the design consideration of the UST.

ISSN (O) 2454-9665
ISSN (P) 2454-0663

REFERENCE

Indian Standard

1) Practice for design, testing and installation Of under-ground/above-ground Horizontal cylindrical steel storage Tanks for petroleum products *(first revision)*
2) Layout, design consideration, safety, operation and maintenance of lube grease manufacturing and filling plants By-oil industry safety directorate, government of india
3) David durenberger bill for ust regulations and environment remedies